SICILIA
ISO STANDARD+

Art 122 109.2

TENE

tene_gardenhouses

Tene Kaubandus aiamajad

www.tene.ee

roll 13 packs

Double Glazed
ISO-Verglasung
Lämpölasit
Isolerglas

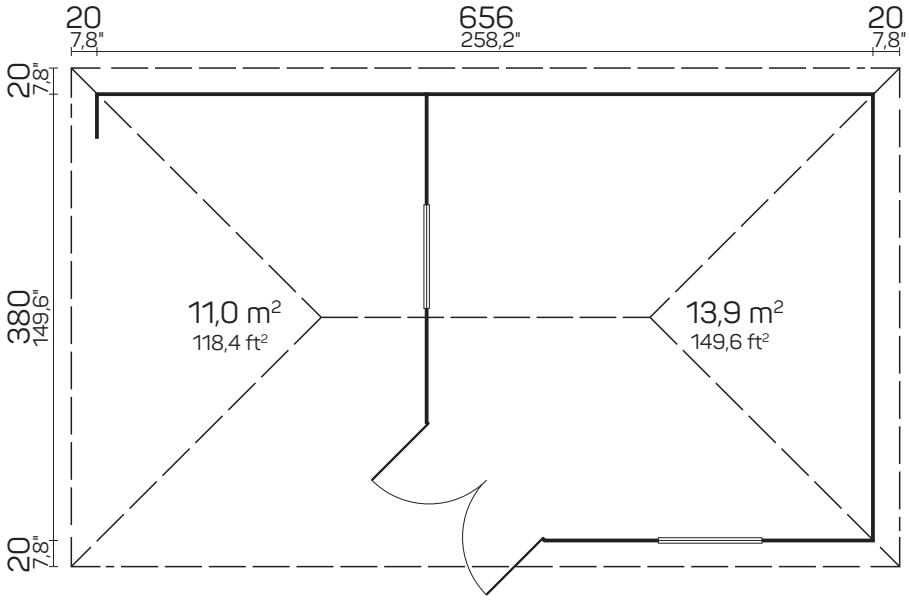

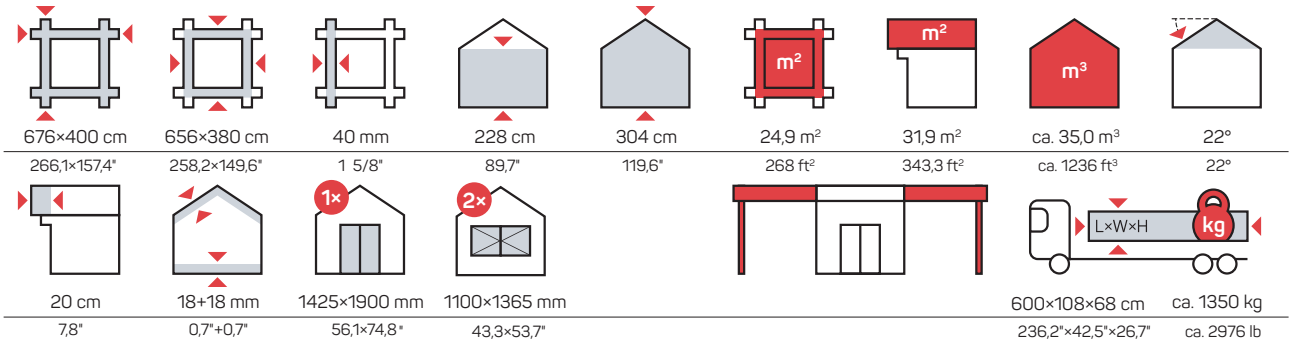

676×400 cm	656×380 cm	40 mm	228 cm	304 cm	24,9 m²	31,9 m²	ca. 35,0 m³	22°
266,1×157,4"	258,2×149,6"	1 5/8"	89,7"	119,6"	268 ft²	343,3 ft²	ca. 1236 ft³	22°
20 cm	18+18 mm	1425×1900 mm	1100×1365 mm				600×108×68 cm	ca. 1350 kg
7,8"	0,7"+0,7"	56,1×74,8"	43,3×53,7"				236,2"×42,5"×26,7"	ca. 2976 lb